Name:_____

School:_____

Grade:_____

Practice Problem (No points)

Practice Problem

Find the value of the expression:

$6(17) + 1881 - 39$

2019 Milton Mini-Mathletes Ciphering

Name:_____

School:_____

Grade:_____

Practice Problem (No points)

Practice Problem

Find the value of the expression:

$6(17) + 1881 - 39$

2019 Milton Mini-Mathletes Ciphering

Name:_____

School:_____

Grade:_____

11 points 5 points 0 points

Problem 1

A rectangle has sides of length 16 and 9. What is the sum of its area and perimeter?

2019 Milton Mini-Mathletes Ciphering

Name:_____

School:_____

Grade:_____

11 points 5 points 0 points

Problem 1

A rectangle has sides of length 16 and 9. What is the sum of its area and perimeter?

2019 Milton Mini-Mathletes Ciphering

Name:_____

School:_____

Grade:_____

11 points 5 points 0 points

Problem 2

At Starbucks, I pay 3.30 for a tall cup of coffee that has 7 ounces. I also pay $4.65 for a grande cup that has 11 ounces. What is the difference in the unit rates of each cup per ounce, rounded to the nearest cent? Specify units in your answer.

Name:_____

School:_____

Grade:_____

11 points 5 points 0 points

Problem 2

At Starbucks, I pay $2.90 for a tall cup of coffee that has 7 ounces. I also pay $4.65 for a grande cup that has 11 ounces. What is the difference in the unit rates of each cup per ounce, rounded to the nearest cent? Specify units in your answer.

Name:_____

School:_____

Grade:_____

11 points 5 points 0 points

Problem 3

The symbols ♡ and ❤ are whole numbers and satisfy the equation ♡ × ❤ = 36. What is the largest possible value of (2♡) + (3 ❤)?

2019 Milton Mini-Mathletes Ciphering

Name:_____

School:_____

Grade:_____

11 points 5 points 0 points

Problem 3

The symbols ♡ and ❤ are whole numbers and satisfy the equation ♡ × ❤ = 36. What is the largest possible value of (2♡) + (3 ❤)?

2019 Milton Mini-Mathletes Ciphering

Name:

School:

Grade:

11 points 5 points 0 points

Problem 4

Ava and her sister's rooms are connected with a hallway, and they made a model of their floor plans, where 1 centimeter (cm) represents 2 feet. What is the total area in square feet of their model below? The floor plan shown is in centimeters, and all angles are right.

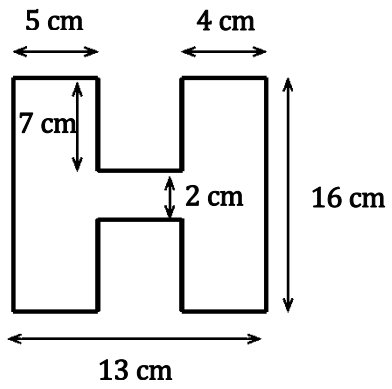

Name:

School:

Grade:

11 points 5 points 0 points

Problem 4

Ava and her sister's rooms are connected with a hallway, and they made a model of their floor plans, where 1 centimeter (cm) represents 2 feet. What is the total area in square feet of their model below? The floor plan shown is in centimeters, and all angles are right.

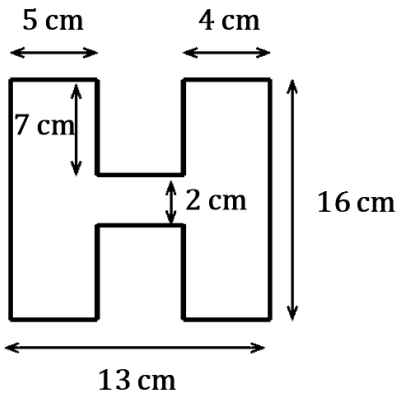

2019 Milton Mini-Mathletes Ciphering

Name:_____

School:_____

Grade:_____

11 points 5 points 0 points

Problem 6

Caitlin spends $\frac{2}{5}$ of her money at one store in the mall. She then spends $\frac{1}{9}$ of the remainder at a second store. If Caitlin has $40 left after purchasing from both stores, how much money did she start with?

Name:_____

School:_____

Grade:_____

11 points 5 points 0 points

Problem 6

Caitlin spends $\frac{2}{5}$ of her money at one store in the mall. She then spends $\frac{1}{9}$ of the remainder at a second store. If Caitlin has $40 left after purchasing from both stores, how much money did she start with?

2019 Milton Mini-Mathletes Ciphering

Name: _____

School: _____

Grade: _____

11 points 5 points 0 points

Problem 5

A tree has 3 branches. On each branch there are 7 leaves. Every year it has twice as many branches. For example, after 1 year, the tree will have 6 branches and 42 leaves. After how many whole years will the tree have at least 2019 leaves?

Name: _____

School: _____

Grade: _____

11 points 5 points 0 points

Problem 5

A tree has 3 branches. On each branch there are 7 leaves. Every year it has twice as many branches. For example, after 1 year, the tree will have 6 branches and 42 leaves. After how many whole years will the tree have at least 2019 leaves?

2019 Milton Mini-Mathletes Ciphering

Name:_____

School:_____

Grade:_____

11 points 5 points 0 points

Problem 7

A telephone pole 10 meters tall casts a shadow 8 meters long. At the same time, a nearby tree casts a shadow 14 meters long. How tall is the tree? Write your answer as an exact decimal.

Name:_____

School:_____

Grade:_____

11 points 5 points 0 points

Problem 7

A telephone pole 10 meters tall casts a shadow 8 meters long. At the same time, a nearby tree casts a shadow 14 meters long. How tall is the tree? Write your answer as an exact decimal.

2019 Milton Mini-Mathletes Ciphering

Name: _____

School: _____

Grade: _____

11 points 5 points 0 points

Problem 8

A square with side length 8 is inscribed in a circle. What is the area of shaded area in terms of π?

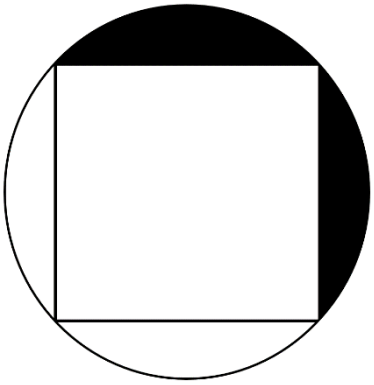

Name: _____

School: _____

Grade: _____

11 points 5 points 0 points

Problem 8

A square with side length 8 is inscribed in a circle. What is the area of shaded area in terms of π?

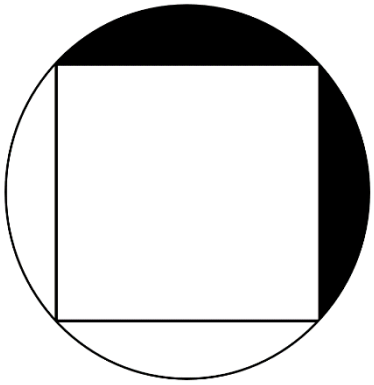

2019 Milton Mini-Mathletes Ciphering

Name: _____

School: _____

Grade: _____

11 points 5 points 0 points

Problem 9

A box contains gold coins. If the coins are equally divided among four people, 1 coin is left over. When equally divided among, six people, 3 coins are left over. When equally divided among seven people, 4 coins are left over. What is the smallest possible number of coins in the box?

Name: _____

School: _____

Grade: _____

11 points 5 points 0 points

Problem 9

A box contains gold coins. If the coins are equally divided among four people, 1 coin is left over. When equally divided among, six people, 3 coins are left over. When equally divided among seven people, 4 coins are left over. What is the smallest possible number of coins in the box?

2019 Milton Mini-Mathletes Ciphering

Name:_____

School:_____

Grade:_____

11 points 5 points 0 points

Problem 10

The state of Georgia now issues license plates with 4 letters and 3 numbers, but ten years ago, it made plates with 3 letters and 4 numbers. How many more times as many license plates can be issued now than ten years ago?

Name:_____

School:_____

Grade:_____

11 points 5 points 0 points

Problem 10

The state of Georgia now issues license plates with 4 letters and 3 numbers, but ten years ago, it made plates with 3 letters and 4 numbers. How many more times as many license plates can be issued now than ten years ago?

2019 Milton Mini-Mathletes Ciphering

Problem #	My Answer	Correct Answer	# of Points (0, 5, 11)
1			
2			
3			
4			
5			
6			
7			
8			
9			
10			

Problem #	My Answer	Correct Answer	# of Points (0, 5, 11)
1			
2			
3			
4			
5			
6			
7			
8			
9			
10			