Chapter 10 Review 2

1. Quadrilatera $ABCD$ is inscribed in $\odot E$

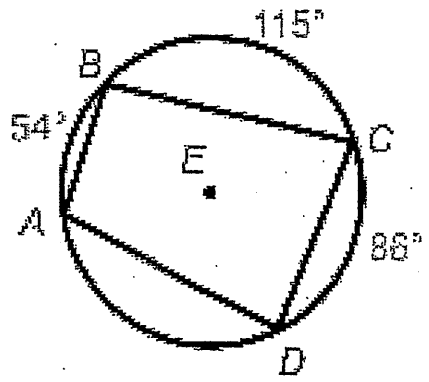

Find :

a) $m\angle A =$

b) $m\angle B =$

c) $m\angle C =$

d) $m\angle D =$

2.

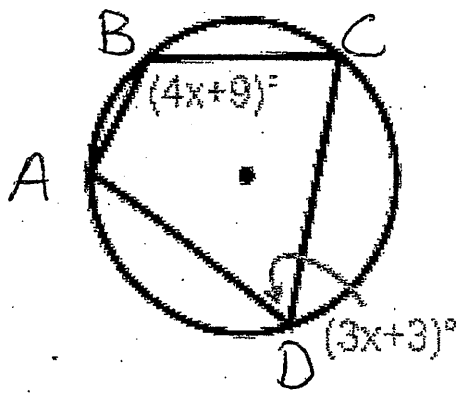

Find :

a) $m\angle B$

b) $m\angle D$

c) Find $m\,\widehat{ADC}$

d) Find $m\,\widehat{ABC}$

3. Find r

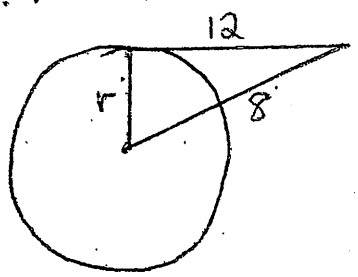

3. Fill in all arcs and angle measures.

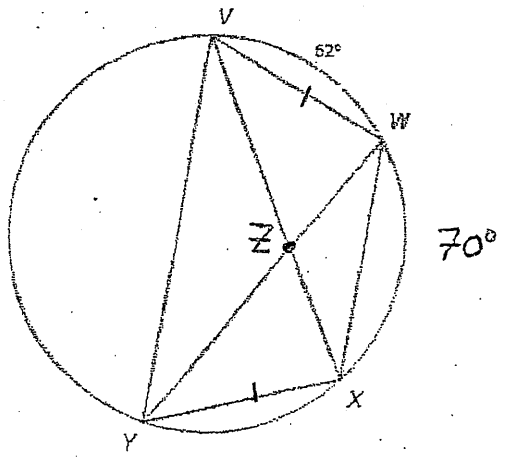

a. Find $m\angle VZW$ _____

b. Find $m\widehat{WX}$ 70°

c. Find $m\widehat{VY}$ _____

d. Find $m\angle WYX$ _____

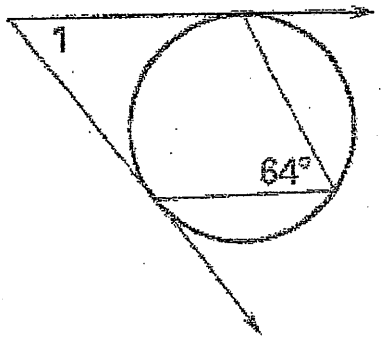

Find $m\angle 1$ _____

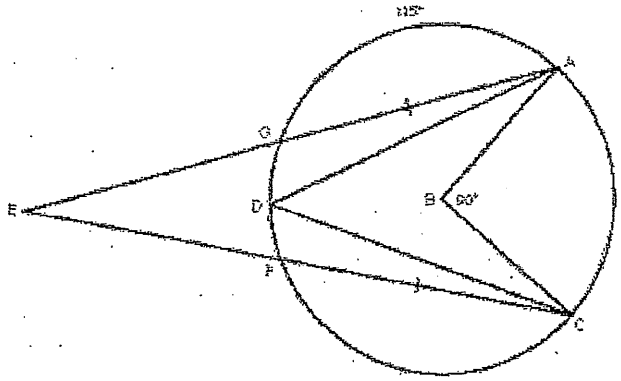

$m\widehat{FG}$ = _____

m ∠AEC= _____

m ∠ADC= _____

Given circle with centre O, $\overline{WT} = \overline{TY}$ and $\widehat{XWT} = 35°$

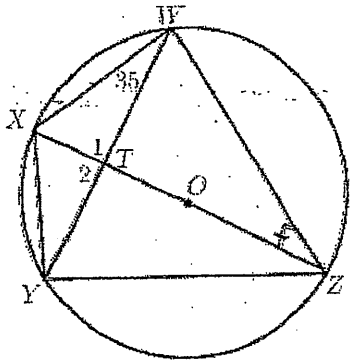

$m\angle 1$ = _____ $m\angle 2$ = _____

$m\angle f$ = _____ $m\angle WYZ$ = _____

Chapter 10 Review 2

Key

1. Quadrilateral $ABCD$ is inscribed in $\odot E$

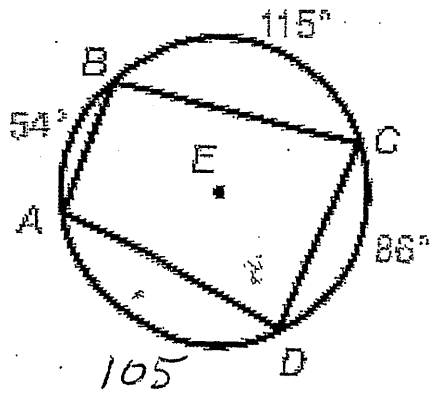

Find :

a) $m\angle A = 100.5$

b) $m\angle B = 95.5$

c) $m\angle C = 79.5$

d) $m\angle D = 84.5$

2.

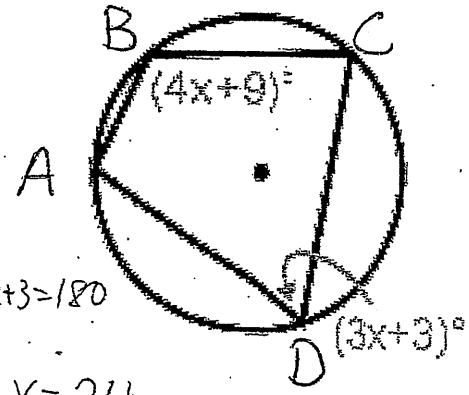

$4x+9+3x+3=180$

$x=24$

Find :

a) $m\angle B$ 105

b) $m\angle D$ 75

c) Find $m\widehat{ADC}$ 210

d) Find $m\overline{ABC}$ 150°

3. Find r

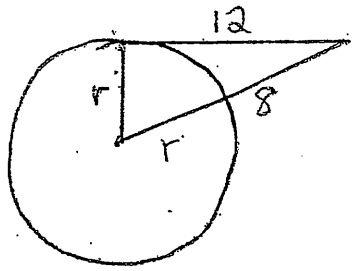

$r^2 + 12^2 = (r+8)^2$

$\boxed{r=5}$

3. Fill in all arcs and angle measures.

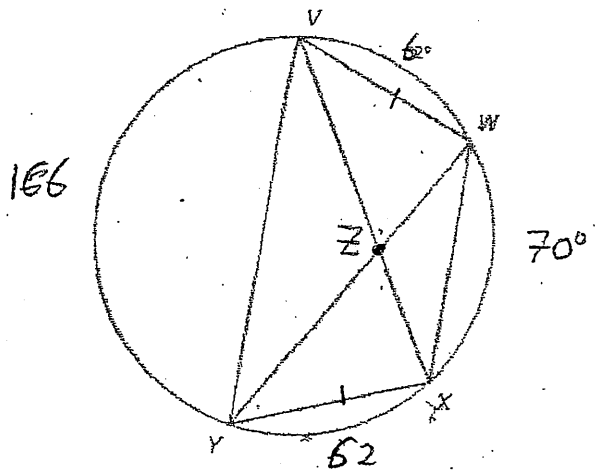

a. Find $m\angle VZW$ 62

b. Find $m\widehat{WX}$ 70°

c. Find $m\widehat{VY}$ 166

d. Find $m\angle WYX$ 35

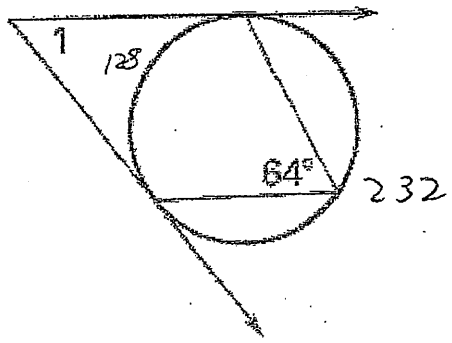

Find $m\angle 1$

$m\angle 1 = \frac{1}{2}(232 - 128)$

$\boxed{m\angle 1 = 52^\circ}$

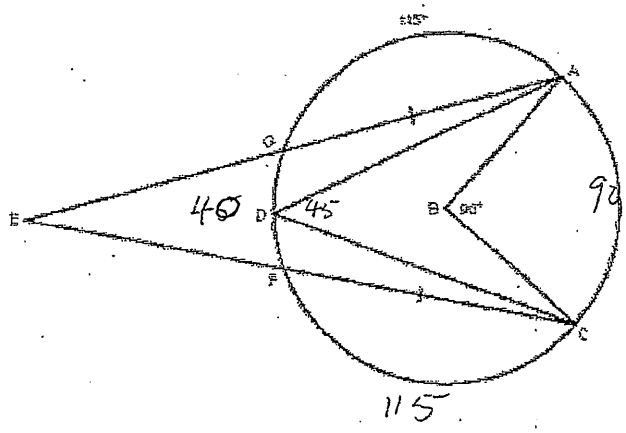

$m\widehat{FG}$= 40°

m ∠AEC= 25

m ∠ADC= 45

Given circle with centre O, $\overline{WT} = \overline{TY}$ and $\widehat{XWT} = 35^\circ$

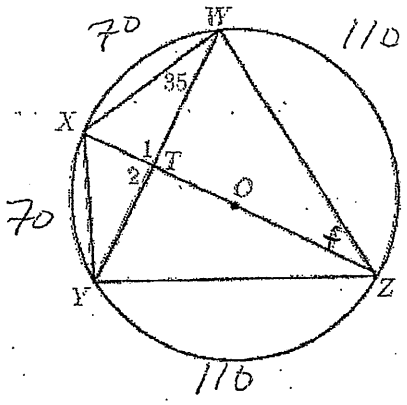

$m\angle 1 =$ 90° $m\angle 2 =$ 90°

$m\angle f =$ 70 $m\angle WYZ =$ 55