Geometry Name_____

Ticket in the Door

Date_____ Period____

Use the information provided to write the standard form equation of each circle.

1) Center: $(-1, -11)$
Radius: 7

2) Center: $(1, 3)$
Radius: 5

Identify the center and radius of each. Then sketch the graph.

3) $(x-3)^2 + (y+3)^2 = 4$

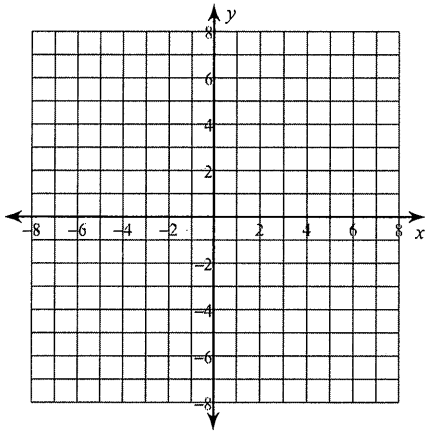

4) $(x-2)^2 + y^2 = 16$

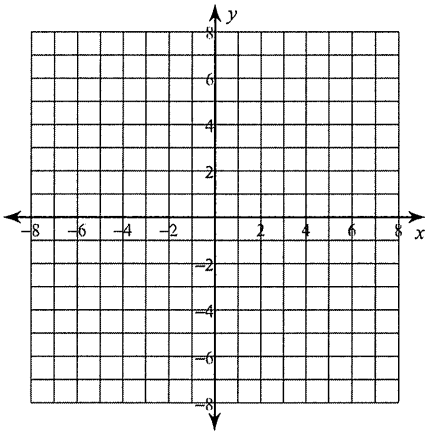

Use the information provided to write the standard form equation of each circle.

5) $x^2 + y^2 + 22x - 10y + 97 = 0$

Geometry Name_____

Ticket in the Door

Date_____ Period____

Use the information provided to write the standard form equation of each circle.

1) Center: $(-1, -11)$
Radius: 7

$(x+1)^2 + (y+11)^2 = 49$

2) Center: $(1, 3)$
Radius: 5

$(x-1)^2 + (y-3)^2 = 25$

Identify the center and radius of each. Then sketch the graph.

3) $(x-3)^2 + (y+3)^2 = 4$

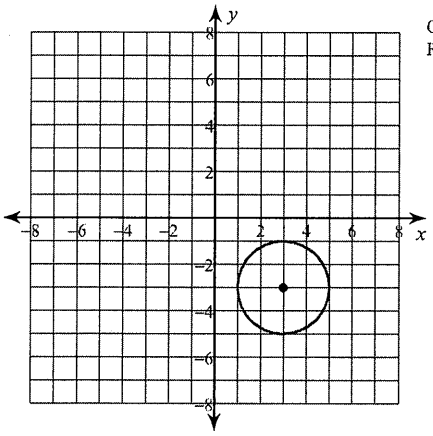

Center: $(3, -3)$
Radius: 2

4) $(x-2)^2 + y^2 = 16$

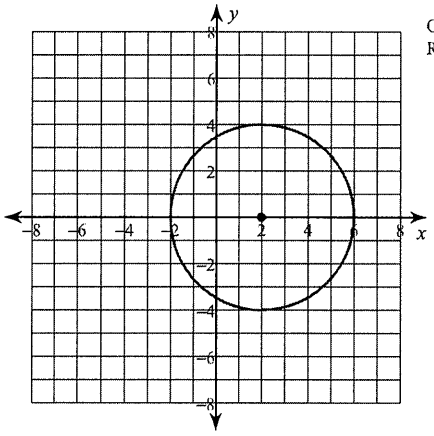

Center: $(2, 0)$
Radius: 4

Use the information provided to write the standard form equation of each circle.

5) $x^2 + y^2 + 22x - 10y + 97 = 0$

$(x+11)^2 + (y-5)^2 = 49$